a)

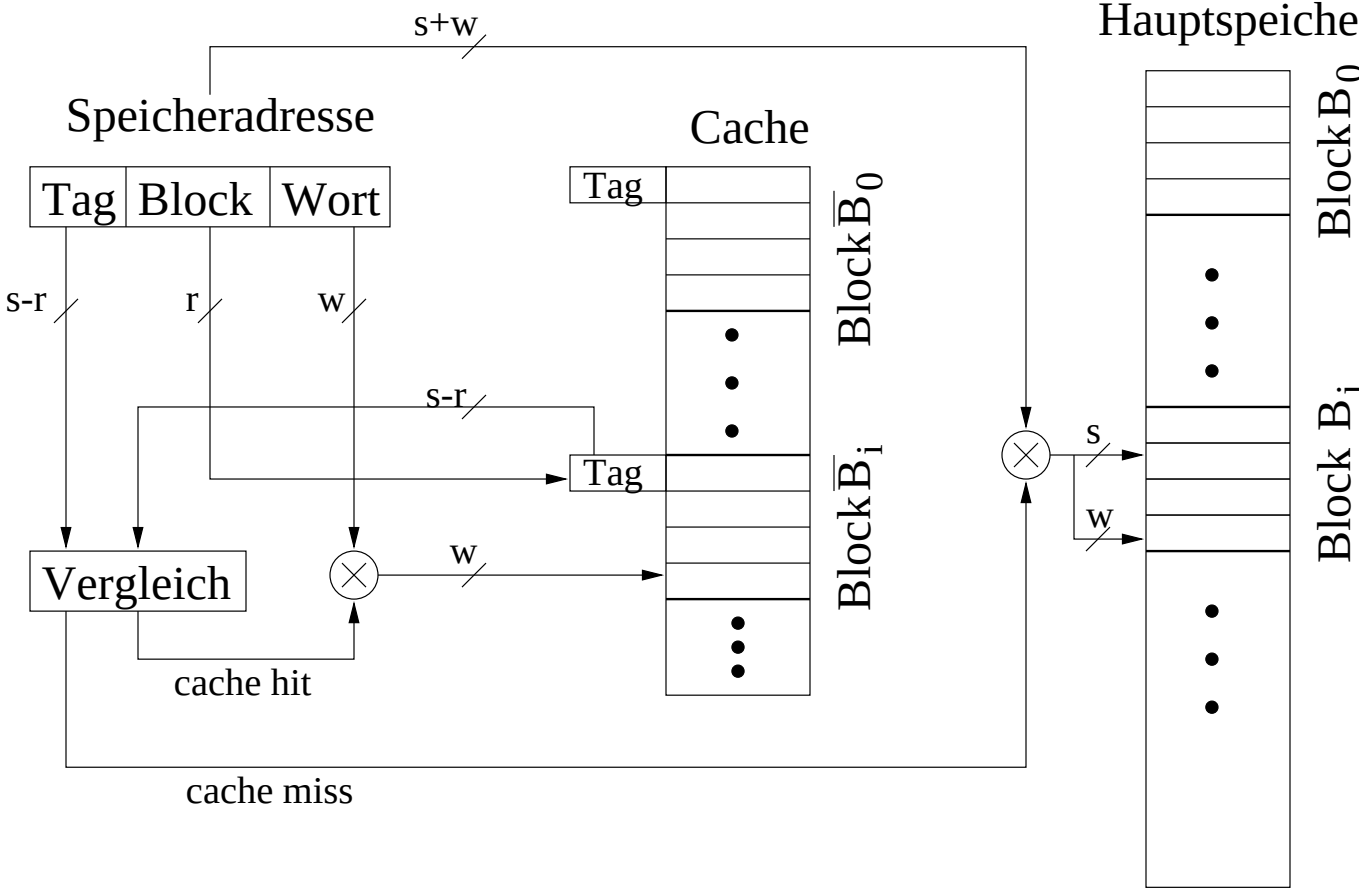
s+w
Hauptspeicher
Speicheradresse
Cache
Tag
Block
Wort
Tag
Block $\overline{B}_0$
s-r
r
w
s-r
Tag
Block $\overline{B}_i$
s
w
Vergleich
w
cache hit
cache miss
Block B_0
Block B_j